BILLY GOAT KV VACUUM

Owner's Manual

KV600SP, KV650SPH, TKV650SPH, KV600SPFB, KV650SPHFB, TKV650SPHFB

Accessories

ON BOARD VACUUM HOSE KIT	***OPTIONAL FELT/MESH DEBRIS BAG***	***NOZZLE WEAR GUARD KIT***	***CASTER KIT***	***SHREDDER KIT***	***KV LINER KIT***	***PROTECTIVE COVER***
4"(102mm) x 7.5' (2.13m) *For vacuuming in hard to reach areas.*	For use in leaves and grass in dusty conditions. ***P/N 891126 FELT BAG P/N 891132 MESH BAG,***	For use in increasing the life of your nozzle by protecting it from damage	To allow for easy rolling and maneuverability on smooth surfaces.	Shreds leaves, reducing total volume.	Increases the life of the housing by protecting it from damage.	Protects the machine from the environment when not in use.
P/N 891125		***P/N 891127***	***P/N 891128***	***P/N 891153***	***P/N 891134***	***P/N 891137***

CONTENTS

SPECIFICATIONS AND SOUND/VIBRATION 3

INSTRUCTION LABELS 4

PACKING CHECKLIST & ASSEMBLY 5

OPERATION 6-7

MAINTENANCE 8-10

TROUBLESHOOTING 11

ILLUSTRATED PARTS & PARTS LISTS 12-14

Go to http://www.billygoat.com for French-Canadian translations of the product manuals.

Visitez http://www.billygoat.com pour la version canadienne-française des manuels de produits

Specifications

	KV600SP	KV650SPH	TKV650SPH	KV600SPFB	KV650SPHFB	TKV650SPHFB
Engine: HP	6.0 (4.47kW)	6.5 (4.85kW)	6.5 (4.85 kW)	6.0 (4.47kW)	6.5 (4.85kW)	6.5 (4.85 kW)
Engine: Type	B&S Quantum	HONDA	HONDA	B&S Quantum	HONDA	HONDA
Engine: Model	112K020124E1	GSV190AN1L	GSV190AN1L	112K020124E1	GSV190AN1L	GSV190AN1L
Engine: Fuel Capacity	1.5 qt. (1.4 L)	1.6 qt. (1.5 L)	1.6 qt. (1.5 L)	1.5 qt. (1.4 L)	1.6 qt. (1.5 L)	1.6 qt. (1.5 L)
Engine: Oil Capacity	0.63 qt. (0.6 L)	0.58 qt (0.54L)	0.58 qt (0.54L)	0.63 qt. (0.6 L)	0.58 qt (0.54L)	0.58 qt (0.54L)
Total Unit Weight:	#129 (58.5 kg)	#132 (58.9 kg)	141# (64 kg)	#129 (58.5 kg)	#132 (58.9 kg)	141# (64 kg)
Overall Length	59" (1.5m)	59" (1.5m)	59" (1.5 m)	59" (1.5m)	59" (1.5m)	59" (1.5 m)
Overall Width	25.5" (.6 m)	25.5" (.6 m)	25.5" (.6 m)	25.5" (.6 m)	25.5" (.6 m)	25.5" (.6 m)
Overall Height	42.75" (1.1m)	42.75" (1.1m)	42.75" (1.1 m)	42.75" (1.1m)	42.75" (1.1m)	42.75" (1.1 m)
Max. operating slope	20^0	20^0	20^0	20^0	20^0	20^0
Sound in accordance with 2000/14/EEC standards	109 dBa	109 dBa	112 dBa	109 dBa	109 dBa	112 dBa
Sound at operator's ear	88 dBa	89 dBa	91 dBa	88 dBa	89 dBa	91 dBa
Vibration at operator position	0.71 g (6.96m/s^2)	0.32 g (3.16m/s^2)	0.43 g (4.25m/s^2)	0.71 g (6.96m/s^2)	0.32 g (3.16m/s^2)	0.43 g (4.25m/s^2)

SOUND

L_{WA}

112 dB

SOUND LEVEL 92 dB(a) at Operator Position

Sound tests were conducted in accordance with 2000/14/EEC, and were performed on 7-25-07 under the conditions listed below.

⚠ Sound power level listed is the highest value for any model covered in this manual. Please refer to serial plate on the unit for the sound power level for your model.

General Conditions:	Sunny
Temperature:	88°F (31.1°C)
Wind Speed:	2 mph (3.8 kmh)
Wind Direction:	South South East
Humidity:	44%
Barometric Pressure:	30.07"Hg (764 mm Hg)

VIBRATION DATA

VIBRATION LEVEL 0.34g (3.29m/s^2)

Vibration levels at the operator's handles were measured in the vertical, lateral and longitudinal directions using calibrated vibration test equipment. Tests were performed on 12-19-2007 under the conditions listed below.

General Conditions:	Sunny
Temperature:	50°F (10°C)
Wind Speed:	4 mph (6.4kph)
Wind Direction:	South Southeast
Humidity:	68%
Barometric Pressure:	30 Hg (101.6kpa)

INSTRUCTION LABELS

The labels shown below were installed on your BILLY GOAT ® KV Vacuum. If any labels are damaged or missing, replace them before operating this equipment. Item numbers from the Illustrated Parts List and part numbers are provided for convenience in ordering replacement labels. The correct position for each label may be determined by referring to the Figure and Item numbers shown.

LABEL DANGER KEEP HANDS AND FEET AWAY ITEM #18 P/N 400424

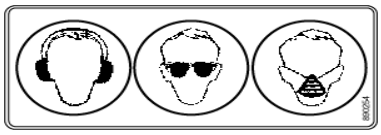

LABEL EAR EYE BREATHING ITEM #20 P/N 890254

DANGER FLYING DEBRIS ITEM #19 P/N 810736

LABEL SPARK ARRESTOR P/N 100252

LABEL READ MANUAL ITEM #17 P/N 890301

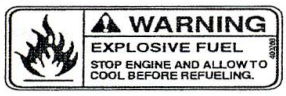

LABEL EXPLOSIVE FUEL ITEM # 16 P/N 400268

CHIPPER WARNING LABEL ITEM #82 P/N 890152 (TKV ONLY)

LABEL DANGER GUARD ITEM #39 P/N 900327

BAG FOLDING INSTRUCTIONS LOCATED ON BAG

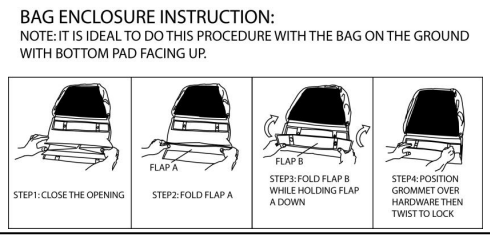

ENGINE LABELS

HONDA

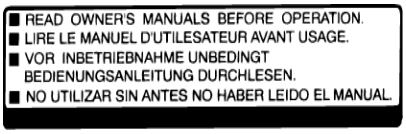

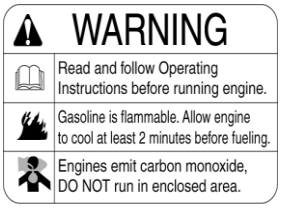

BRIGGS & STRATTON

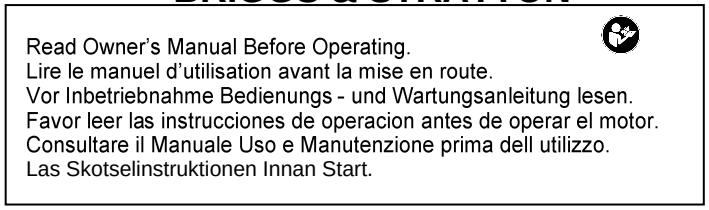

ENGINE and Transmission CONTROLS

Honda Throttle Control

Briggs Throttle Control

Bail Drive Engage/Disengage label

PACKING CHECKLIST

Your Billy Goat KV Vacuum is shipped from the factory in one carton, completely assembled except for the upper handle, debris bag, and bag quick disconnect.

READ all safety instructions before assembling unit.
TAKE CAUTION when removing the unit from the box the Handle Assembly is attached by cables and folded over

PUT OIL IN ENGINE BEFORE STARTING

PARTS BAG & LITERATURE ASSY

Warranty card P/N- 400972, Owner's Manual P/N-891204, General Safety and Warnings Manual P/N-100294, Declaration of Conformity P/N-891057, Ty-wraps 900407 qty 2.

Quick disconnect

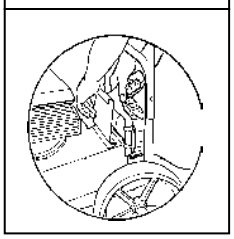

Fig. 2

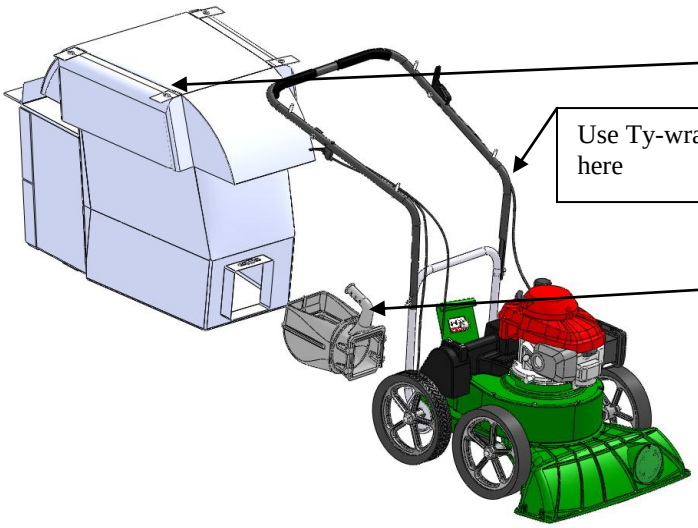

Boxing Parts Checklist

- ☐ **Debris Bag P/N-891132 OR Felt Bag P/N-891126**
- ☐ **Literature Assy P/N-891121**
- ☐ **Connector Quick Disconnect P/N-890630**
- ☐ **Honda 6.5 GSV 190**
- ☐ **Briggs & Stratton 6.0 HP Quantum**

ASSEMBLY

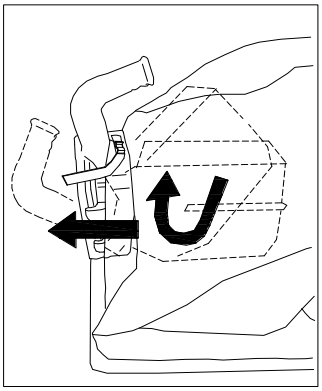

1. **ASSEMBLE** Lift upper handle (item 11), remove items 49, 50, & 51 from lower handle (item 10). Attach and secure upper handle as shown using same hardware.
2. **UNFOLD** the debris bag (item 21) and fasten bag neck to bag quick disconnect (item 12). Attach firmly to housing exhaust (item 1) see fig. 2.
3. **ATTACH** bag to four posts (item 13), preassembled to upper handle.
4. **CONNECT** spark plug wire.

Insert the quick disconnect from the inside of the bag, tilt the handle so it can be fed through first. Then slide the connecting end through and tighten the strap

OPERATION

VACUUMING OPERATION

VACUUM NOZZLE HEIGHT ADJUSTMENT: Nozzle height is raised and lowered by rotating the red knob near the left rear wheel. Nozzle height should be adjusted based on the task being performed.

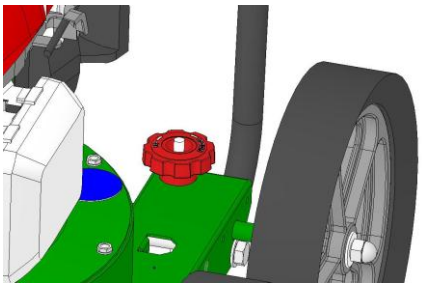

FOR MAXIMUM PICKUP: Adjust nozzle close to debris, but without blocking airflow into the nozzle. *NOTE*: Never bury nozzle into debris.
CLEARING A CLOGGED NOZZLE & EXHAUST: Turn engine off and wait for impeller to stop completely and disconnect spark plug wire. Wearing durable gloves, remove clog. **Danger**, the clog may contain sharp materials. Reconnect spark plug wire.

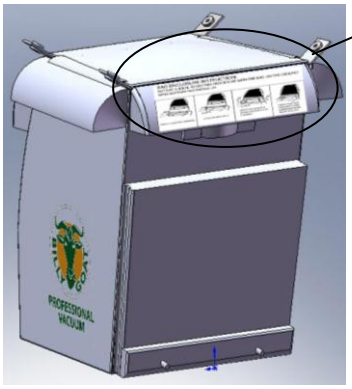

BAG ENCLOSURE INSTRUCTION:
NOTE: IT IS IDEAL TO DO THIS PROCEDURE WITH THE BAG ON THE GROUND WITH BOTTOM PAD FACING UP.

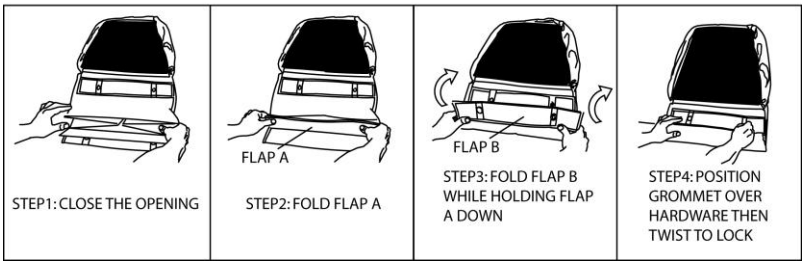

DEBRIS BAG

(OPTIONAL DEBRIS BAGS ARE AVAILABLE FOR CHANGING CONDITIONS)

Debris bags are normal replaceable wear items.

Note: *Frequently empty debris to prevent bag overloading with more weight than you can lift.*
An optional felt bag is available for use where debris will be vacuumed in dusty conditions **(see Optional Accessories shown on page 1)**.
DO NOT place bag on or near hot surface, such as engine. Be sure engine has come to a complete stop before removing or emptying bag.
This vacuum is designed for picking up trash, organic material and other similar debris (see Safety and General Operation manual)**.**
However, many vacuums are used where dust is mixed with trash. Your unit can intermittently vacuum in dusty areas. Dust is the greatest cause of lost vacuum performance. However, following these rules will help maintain your machine's ability to vacuum in dusty conditions:
• Run machine at idle to quarter throttle.
• The debris bag must be cleaned more frequently. A vacuum with a clean, pillow soft bag will have good pickup performance. One with a dirty, tight bag will have poor pickup performance. If dirty, empty debris and vigorously shake bag free of dust.
• Pressure-wash debris bag if normal cleaning does not fully clean bag. Bag should be thoroughly dry before use.
NOTE: *Having one or more spare debris bags is a good way to reduce down time while dirty bags are being cleaned.*
DO NOT leave debris in bag while in storage.

COMPOST

Vacuumed leaves, grass and other organic material from your own yard can be emptied into a pile or composter to provide enriched soil for later use as fertilizer in gardens and flower beds
NOTE: Allow green chips to dry before spreading around living plants.

MULCH

Wood chips made from branches in your own yard make excellent mulch. A thick blanket of wood chips around plants and flowers to keeps weeds out and moisture in.

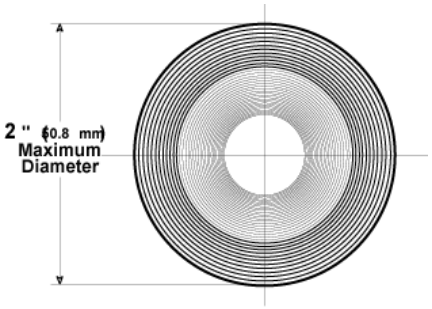

CHIPPER OPERATION (TKV only)

Your ***TKV*** chipper is designed to process tree branches and limbs up to 2" (50.8mm) diameter.

Several small branches can be grouped together and fed together into the chipper (see figure right).

When feeding forked branches, squeeze forks together and feed into chipper entrance (DO NOT overload). If forks are too large, use a pair of loppers to trim forks down to size. A lopper storage bracket is provided on every unit (loppers are not included)

Clearing a clogged chipper (TKV only)

Under normal circumstances, allow time for machine to clear all wood from chipper hopper before stopping engine. Otherwise, remaining pieces of wood will jam inside of chipper when engine stops. (See Tamper below).

Disconnect spark plug wire.
Remove debris bag quick disconnect from debris outlet on machine.
Wearing durable gloves, access impeller through debris outlet on fan housing and rotate impeller counter clock wise to dislodge and remove jam and remove debris from hopper with tongs or equivalent. Reconnect debris bag quick disconnect to machine.
Reconnect spark plug wire.

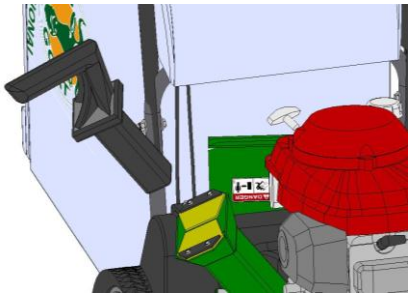

TAMPER (TKV only)

Before turning machine off, use the Tamper to slowly push remaining pieces of wood through the chipper. This can prevent any remaining wood from jamming in the chipper when machine is turned off.
Do not leave tamper on the ground, store tamper in the chipper hopper.

MAINTENANCE

PERIODIC MAINTENANCE

Periodic maintenance should be performed at the following intervals:

Maintenance Operation	Every Use (daily)	Every 5 hrs (daily)	Every 25 Hours
Inspect for loose, worn or damaged parts.		●	
Clean Debris bag	●		
Check bag strap tightness	●		
Engine (See Engine Manual)			
Check for excessive vibration		●	

IMPELLER REMOVAL

1. Wait for engine to cool and disconnect spark plug.
2. Drain fuel and oil from the engine.
3. Remove bag, quick release and upper handle. Do not kink, stretch, or break control cables, control housings, or end fittings while removing handles.
4. Remove the transmission cover, idler pulley, transmission and the belt from the transmission.
5. Remove the transmission plate and the housing top plate by removing bolts around outside of housing.
6. Leaving engine fastened to top plate; turn it upside down so the impeller is on top.
7. Remove impeller bolt and lock washer.
8. Lift impeller upward. If impeller slides freely, proceed to (step 10).
9. If the impeller does not loosen, obtain a 3/4-16x3" (Billy Goat part #440192) or longer bolt. Thread bolt by hand into nut until bolt rests against the shaft. Tighten the bolt slowly, which will pull the impeller away from the shaft, remove impeller from shaft. *Using a penetrating oil can help loosen a stuck impeller*.
10. Using a new impeller bolt, lockwasher, and washer, reinstall new impeller in reverse order.
11. Tighten impeller bolt. Torque impeller bolt to 33-38 Ft. Lbs. (44-51 N.m) (see item 45 on page 15).
12. Reinstall engine onto housing in reverse order of removal make sure the belt is inside the two fingers on the belt plate and that the belt is on the transmission pulley before securing the transmission.
13. Gas and oil.
14. Reconnect spark plug wire.

DRIVE CHAIN REPLACEMENT AND ALIGNMENT

1. Wait for engine to cool and disconnect spark plug.
2. To replace a chain, first prop up the rear of the machine with small blocks to get the rear wheels off of the ground.
3. Remove the transmission cover, and the belt from the transmission.
4. Remove the bolts on both sides of the transmission holding the flange bearings; this should give enough slack to slip the chain off.
4. Replace the old chain with a new one.
5. Once the chain is on, put the bolts back into the flange bearings and tighten.
6. Finally, make sure the wheels rotate freely. If not, loosen the bearings and shift them to get the chain running straight up and down.
7. Reassemble the transmission components removed in steps 1-3 in reverse order.

BELT TENSION ADJUSTMENT

DO NOT ADJUST WHILE THE MACHINE IS RUNNING!

1. Wait for engine to cool and disconnect spark plug.
2. Remove the transmission cover
3. Using two ½" wrenches loosen the two nuts on the cable that connects to the idler arm.
4. The setting of the tension on the belt is controlled by the distance on the threads of the cable. To loosen tension, move the position towards the end of the threads and in the opposite direction to tighten.
5. Check the travel of the idler arm by engaging the bail, which the drive should start to engage when the bail is 2 ½ inches away from the handle. The spring, at a relaxed state should be 1.5 inches long on the coil, and when the bail is in contact with the handle it should be 1.75 inches long. If the belt is too tight it can cause premature failure and if it is too loose it can come off of the pulley.
6. When satisfied with the position, place the transmission cover back into place and secure. Then run the machine to make sure the transmission is engaging properly. If the drive will not engage or will not disengage repeat the previous steps.

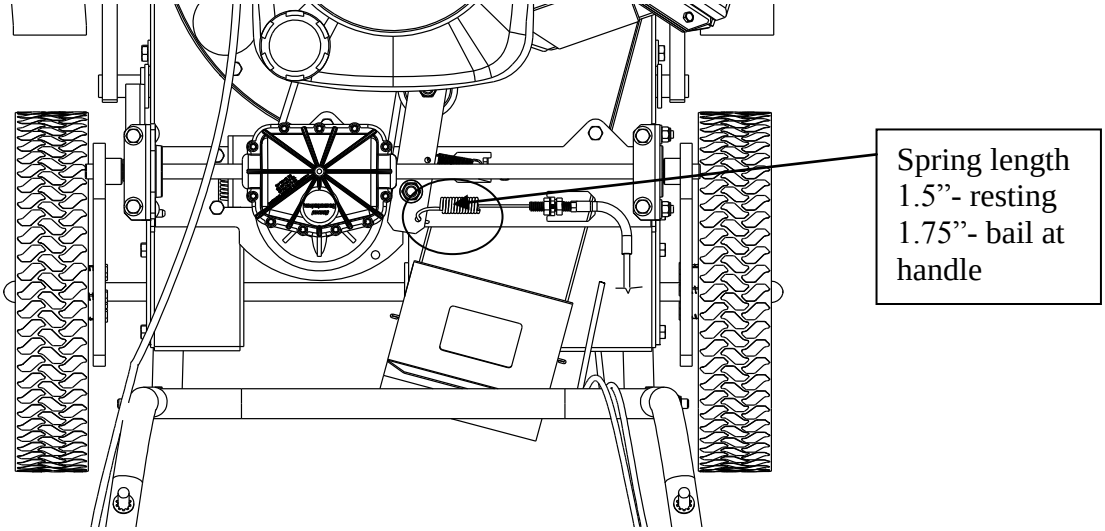

BELT REPLACEMENT

1. Wait for engine to cool and disconnect spark plug.
2. Drain fuel and oil from the engine.
3. Remove bag, quick release and upper handle. Do not kink, stretch, or break control cables, control housings, or end fittings while removing handles.
4. Remove the transmission cover, idler pulley, transmission and the belt from the transmission.
5. Remove the transmission plate and the housing top plate by removing bolts around outside of housing.
6. Leaving engine fastened to top plate, turn it upside down so the impeller is on top.
7. Remove impeller bolt and lock washer.
8. Lift impeller upward. If impeller slides freely, proceed to (step 10).
9. If the impeller does not loosen, obtain a 3/4-16x3" (Billy Goat part #440192) or longer bolt. Thread bolt by hand into nut until bolt rests against the shaft. Tighten the bolt slowly, which will pull the impeller away from the shaft, remove impeller from shaft. *Using a penetrating oil can help loosen a stuck impeller*.
10. Place the new belt on the shaft.
11. Using a new impeller bolt and lockwasher, reinstall new impeller in reverse order.
12. Tighten impeller bolt. Torque impeller bolt to 33-40 Ft. Lbs. (44-54 N.m) (see item 45 on page 15).
13. Make sure the belt is in the groove on the impeller and feed it through the hole in the top plate.
14. Reinstall engine onto housing in reverse order of removal make sure the belt is inside the two fingers on the belt plate and that the belt is on the transmission pulley before securing the transmission.
15. Gas and oil.
16. Reconnect spark plug wire.

CHIPPER BLADE REMOVAL AND SHARPENING (TKV ONLY)

Chipper blades are normal replaceable wear items.

⚠**DANGER Chipper blade is sharp. Replace any damaged blade.**

Depending on the type and amount of wood being chipped, the chipper blade will eventually get dull, losing it's cutting ability. Evidence of a dull blade is a noticeably reduced chipping ability or a rough cut on end of branch. ***Note:*** *The chipper blade gap is factory set and should be checked each time impeller is removed from engine crankshaft and reset if required. If reassembly requires a different quantity of shim washers, Billy Goat® shim washer must be used.*

1. Follow the steps 1-6 on the impeller removal instructions**.**

2. Using a 3/16" Allen wrench and 1/2" open end wrench, remove chipper blade from impeller.

3. Sharpen blade by lightly grinding the cutting edge of the blade at **40 degrees** (see figure below). It is not necessary to remove all nicks from the cutting edge. ***CAUTION:*** Be careful to avoid heat buildup in the blade during sharpening. This will reduce it's heat- treated hardness properties and will reduce blade life. Evidence of too much heat build-up is a change of color along sharpened edge.

4. The same chipper blade can be sharpened several times. However, blade replacement is required when blade no longer overhangs the chip relief hole in impeller back plate or if increased vibration occurs (see fig below).

5. Chipper blade installation is in reverse order of removal.

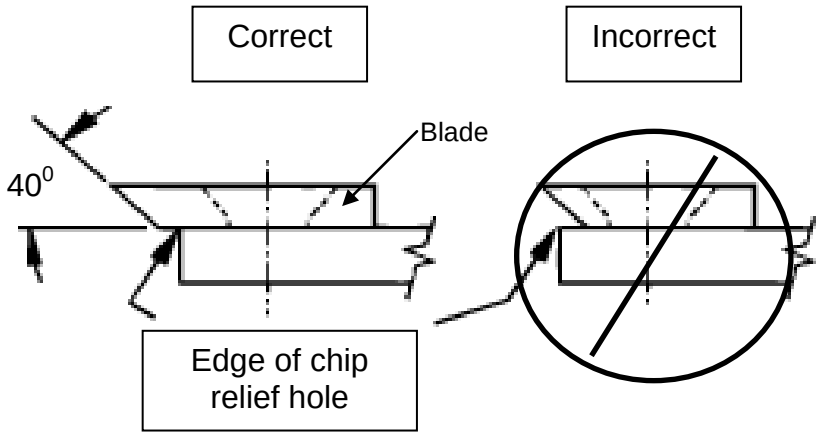

Troubleshooting

Problem	Possible Cause	Solution
Abnormal vibration.	· Loose or out of balance impeller or loose engine	· Check impeller and replace if required. Check engine
Will not vacuum or has poor vacuum performance	· dirty debris bag. Hose kit cap missing. ·Clogged nozzle or exhaust. Excessive quantity of debris. · Improper nozzle height	· Clean debris bag. Shake bag clean or wash. Check for hose kit cap. Unclog nozzle or exhaust. Allow air to feed with debris · Adjust nozzle height so that it is closer to the debris
Engine will not start.	· Throttle in off position. Engine not in full choke position. Out of gasoline. Bad or old gasoline. Sparkplug wire disconnected. Dirty air cleaner	· Check stop switches, throttle, choke position and gasoline. Connect spark plug wire. Clean or replace air filter. Or contact a qualified service person.
Engine is locked, will not pull over.	· Debris locked in impeller. Engine problem.	· See page 5. Contact a engine service dealer for engine problems
Nozzle scrapes ground in lowest height setting.	Nozzle height out of adjustment	Adjust nozzle height (See Nozzle height fine adjustment for hard surfaces on page 5
No self-propelling	· Drive bail not engaged · Drive belt worn or broken · Drive clutch cable out of adjustment or broken. · Drive chain off the sprocket.	· Engage the drive bail. · Check the drive belt. · Check the drive clutch cable (see page 12). · Check the drive chain (see page 12).
Self propelled drive will not release	· Improper drive clutch cable adjustment or cable is kinked.	· Check the drive clutch cable (see page 13).
Noisy or broken chain	· No chain lubrication. · Chain misalignment or tension.	· Lubricate chain. · Check the drive chain (see page 12).
Unit does not free-wheel backwards	· None	· Push the unit slightly forward then the unit will free-wheel
Too much dust coming from bag.	· Vacuuming very dry, brittle or small debris	· Switch to felt bag (see page 1 accessories)

PARTS DRAWING KVSP/TKVSP

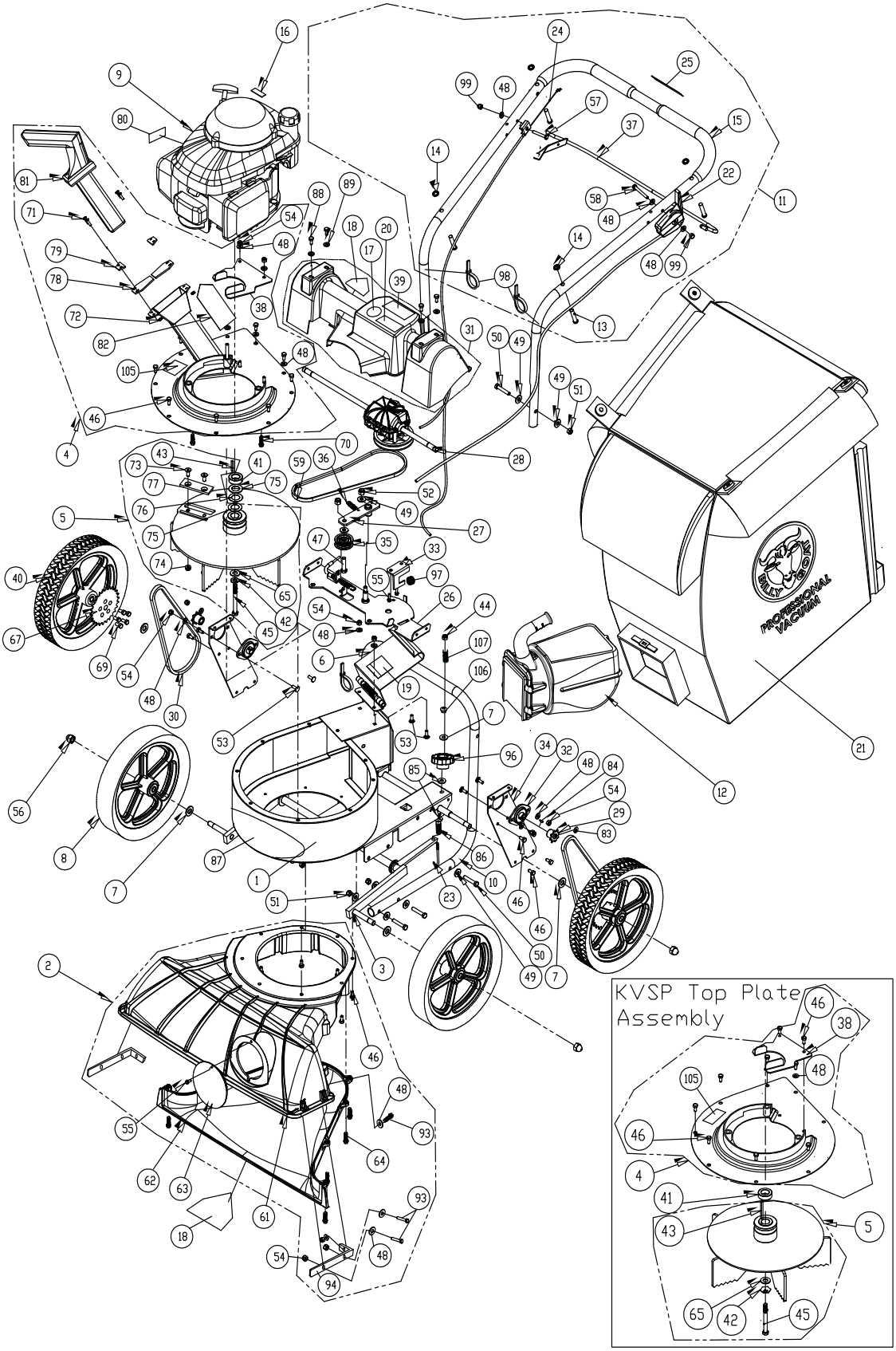

PARTS LIST KVSP/TKVSP

ITEM NO.	Description	KV600SP/KV600SPFB PART NUMBER	QTY	KV650SPH/KV650SPHFB PART NUMBER	QTY	TKV650SPH/TKV650SPHFB PART NUMBER	QTY
1	MAIN FRAME HOUSING KV	891100-S	1	891100-S	1	891100-S	1
2	NOZZLE ASSEMBLY TKV	891110-S	1	891110-S	1	891110-S	1
3	AXLE WA KV MICRO	891138	1	891138	1	891138	1
4	PLATE TOP WA KVSP	891101-S	1	891101-S	1	891107-S	1
5	IMPELLER SERRATED 14.25 WA KVSP	891104-S	1	891104-S	1	891109-S	1
6	DOOR EXHAUST ASSY RAW	890148-01	1	890148-01	1	890148-01	1
7	WASHER 1/2" SAE Z/P	8172011	5	8172011	5	8172011	5
8	WHEEL ASSY 12" X 2.5" TREAD	900509	2	900509	2	900509	2
9	ENGINE 6.5 HP HONDA GSV190AN1L	-	-	840069	1	840069	1
	ENGINE 6 BRIGGSAND STRATTON	890622	1	-	-	-	-
10	LOWER HANDLE KV	891050	1	891050	1	891050	1
11	HANDLE UPPER KVSP	891054-S	1	891054-S	1	891054-S	1
12	QUICK DISCONNECT	890630	1	890630	1	890630	1
13	PIN CLEVIS 3/8" x 2.125" LONG	520120	4	520120	4	520120	4
14	RETAINER	360279	4	360279	4	360279	4
15	GRIP HANDLE 1"X 9.5" LG	430342	2	430342	2	430342	2
16	LABEL HOT ENGINE EN/SP	100261	1	-	-	-	-
17	LABEL READ	890301	1	890301	1	890301	1
18	LABEL WARNING DANGER	400424	2	400424	2	400424	2
19	LABEL DANGER FLYING DEBRIS	810736	1	810736	1	810736	1
20	LABEL EAR EYE BREATHING	890254	1	890254	1	890254	1
21	BAG DEBRIS NO ZIPPER KV	891132	1	891132	1	891132	1
	BAG FELT W/SKIRT KV (FB MODELS)	891211	1	891211	1	891211	1
22	CABLE THROTTLE ASSY 42" W/CHOKE	891036	1	891027	1	891027	1
23	J BOLT 3/8-16 X 6"	891071	1	891071	1	891071	1
24	CABLE CLUTCH DRIVE ASSY 40" KVSP	891032	1	891032	1	891032	1
25	LABEL CLUTCH VQ	900328	1	900328	1	900328	1
26	BRACKET TRANS MOUNT WA KV	891106	1	891106	1	891106	1
27	ARM IDLER DRIVE WA KV	891105	1	891105	1	891105	1
28	TRANS SINGLE SPEED W/DIFF	891020	1	891020	1	891020	1
29	SPROCKET 8 TOOTH #43 OR #65	891022	2	891022	2	891022	2
30	CHAIN #43 X 58 PITCHES	891023	2	891023	2	891023	2
31	GUARD DRIVE KV	891004-S	1	891004-S	1	891004-S	1
32	BEARING 1/2" PRESSED STEEL HOUSING	891025	2	891025	2	891025	2
33	BRACKET TRANS FIX KV	891012	1	891012	1	891012	1
34	PLATE CHAIN REINFORCE KV	891014	2	891014	2	891014	2
35	PULLEY IDLER 2" OD X 3/8" ID	840087	1	840087	1	840087	1
36	SPRING TENSION	800242	1	800242	1	800242	1
37	BAIL CLUTCH WA KVSP	891102	1	891102	1	891102	1
38	BRACKET IDLER BELT FINGER KV	891028	1	891028	1	891028	1
39	LABEL DANGER GUARD	900327	1	900327	1	900327	1
40	WHEEL ASSY SP 26T SPROCKET	890242	2	890242	2	890242	2
41	SPACER 1.50OD X .890ID X .5 THK	-	-	840083	1	840083	1
42	WASHER LOCK 3/8 ST MED	8177012	1	8177012	1	8177012	1
43	SQ KEY 2.125 X .187	9201087	1	9201087	1	9201087	1
44	NUT LOCK 3/8-16 THIN	8161042	1	8161042	1	8161042	1
45	SCREW CAP 3/8-24 x 3 1/2 GR. 8 W/PATCH	440151	1	440151	1	440151	1

		KV600SP/KV600SPFB PART NUMBER	QTY	KV650SPH/KV650SPHFB PART NUMBER	QTY	TKV650SPH/TKV650SPHFB PART NUMBER	QTY
46	SCREWCAP 1/4 - 20 x 5/8 HWH	890359	26	890359	26	890359	24
47	BOLT IDLER 3/8-16 X 1 1/2	800888	1	800888	1	800888	1
48	WASHER 1/4" SAE ZP	8172007	17	8172007	17	8172007	17
49	WASHER 5/16 FLATWASHER Z/P	8171003	19	8171003	19	8171003	19
50	SCREWCAP 5/16-18 X 1.75 ZP	8041031	8	8041031	8	8041031	8
51	NUT LOCK 5/16-18	8160002	8	8160002	8	8160002	8
52	NYLON INSERT LOCKNUT, 3/8-16 UNC	8160003	2	8160003	2	8160003	2
53	SCREWCAP 1/4-20 X 3/4"	8041004	2	8041004	2	8041004	2
54	NYLON INSERT LOCKNUT, 1/4-20 UNC	8160001	12	8160001	12	8160001	15
55	SCREWCAP #10-14 X 3/4" HWH ZP	891043	3	891043	3	891043	3
56	1/2-13 CAP NUT NP W/PATCH	890530	4	890530	4	890530	4
57	SCREWCAP 1/4-20 x 1 3/4 HCS ZP	8041009	1	8041009	1	8041009	1
58	SCREWCAP 1/4-20x2"	8041010	1	8041010	1	8041010	1
59	BELT 3V315	891026	1	891026	1	891026	1
60							
61	NOZZLE TOP HALF KV	891002	1	891002	1	891002	1
62	NOZZLE BOTTOM HALF KV	891003	1	891003	1	891003	1
63	PLUG HOUSING KD LB	900146-01	1	900146-01	1	900146-01	1
64	SCREW PLASTIC 1/4-20 X 1	891039	8	891039	8	891039	8
65	WASHER 1.5 OD X .453 ID X .25 THK	440153	1	440153	1	440153	1
66							
67	SPROCKET 65A26 26 TOOTH	890238	2	890238	2	890238	2
68							
69	SCREW SELF TAP 1/4 x 0.75	900505	10	900505	10	900505	10
70	SCREW PLASTITE 1/4-20 X 3/4 HWH ZP	840082	3	840082	3	840082	3
71	SCREWCAP #10-24 X 5/8"	-	-	-	-	8059135	4
72	NYLON INSERT LOCKNUT 10-32 UNF ZINC	-	-	-	-	8164005	4
73	SCREW SOCKET HD 5/16-18 X 3/4 GR. 8	-	-	-	-	890103	2
74	NUT KEPS 5/16-18	-	-	-	-	890104	2
75	WASHER SHIM 0.875 ID X 0.060	-	-	-	-	891065	2
76	WASHER SHIM 0.875 ID X 0.020	-	-	-	-	891041	0-3
77	BLADE CHIPPER KD501	-	-	-	-	890101	1
78	GUARD FLAPPER	-	-	-	-	890119	2
79	PLATE FLAPPER ENTRANCE	-	-	-	-	890127	2
80	LABEL SPARK ARRESTOR EN/SP	-	-	100252	1	100252	1
81	TAMPER CHIPPER	-	-	-	-	890229	1
82	LABEL DANGER CHIPPER	-	-	-	-	890152	1
83	CLIP 1/2"	350146	4	350146	4	350146	4
84	WOODRUFF KEY 1/8 X 1/2	510180	2	510180	2	510180	2
85	WASHER 1/2" FC	8171006	2	8171006	2	8171006	2
86	SPRING COMPRESSION	891072	1	891072	1	891072	1
87	LABEL DECAL KV/TKV	891046	1	891046	1	891047	1
88	SCREW SM 1/4 X 3/4 DRILL PT	510208	4	510208	4	510208	4
89	WASHER 1/4" SAE BLACK OXIDE	510193	4	510193	4	510193	4
91							
92	CARRIAGE BOLT 1/4"-20 X 3/4"	8024021	4	8024021	4	8024021	4
93	SCREWCAP 1/4-20 X 1" HCS ZP	8041006	6	8041006	6	8041006	6
94	KV NOZZLE BRACKET	891208	2	891208	2	891208	2
95							
96	KNOB 3/8-16 RED	891070	1	891070	1	891070	1
97	SPRING LEVER GZ	610429	1	610429	1	610429	1
98	TY WRAP	900407	4	900407	4	900407	4
99	NUT 1/4-20 ACORN	840071	2	840071	2	840071	2
100							
105	LABEL MADE IN U.S.A.	520116	1	520116	1	520116	1
106	GROMMET FLANGE 1/2" MOLDED	830176	1	830176	1	830176	1
107	SPRING COMPRESSION	400332	1	400332	1	400332	1